PARTS LIST					
ITEM	QTY	PART NUMBER	DESCRIPTION	MASS	MATERIAL
1	1	HBG1-007	OUTPUT SHAFT	16.697 kg	4140 Steel

A-A (1 : 2)

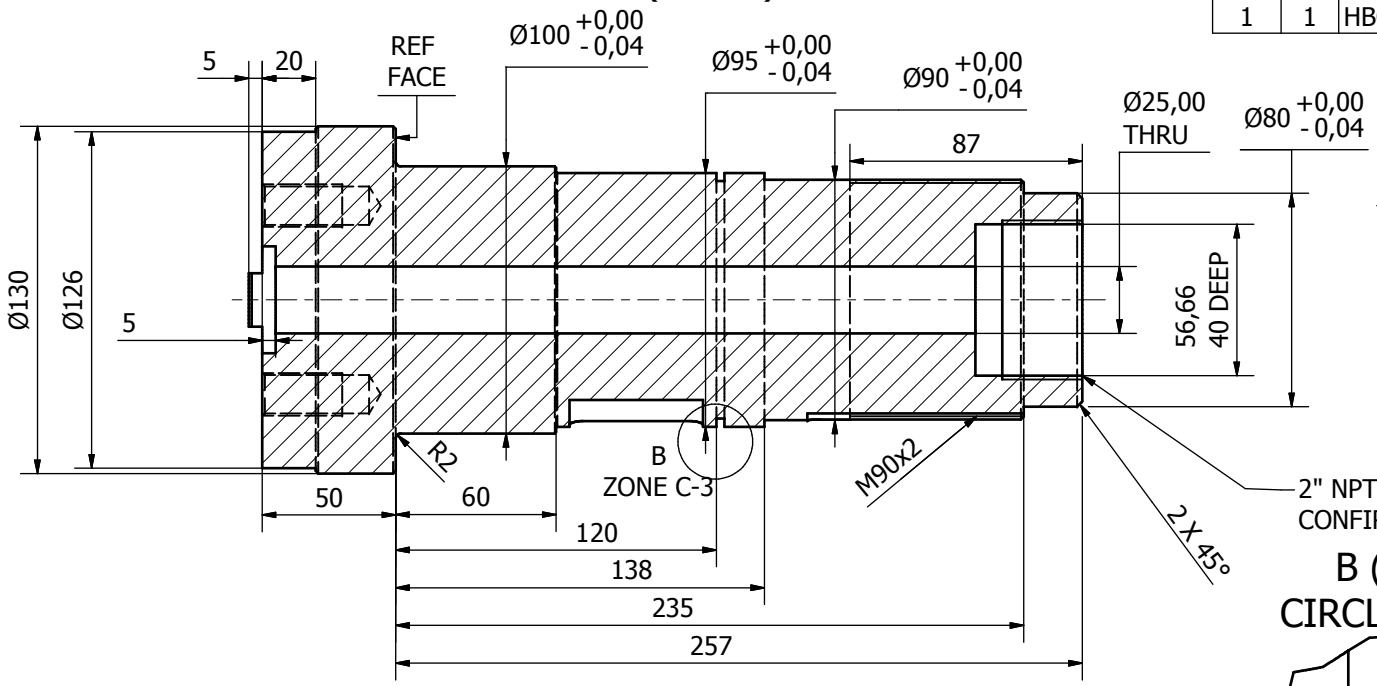

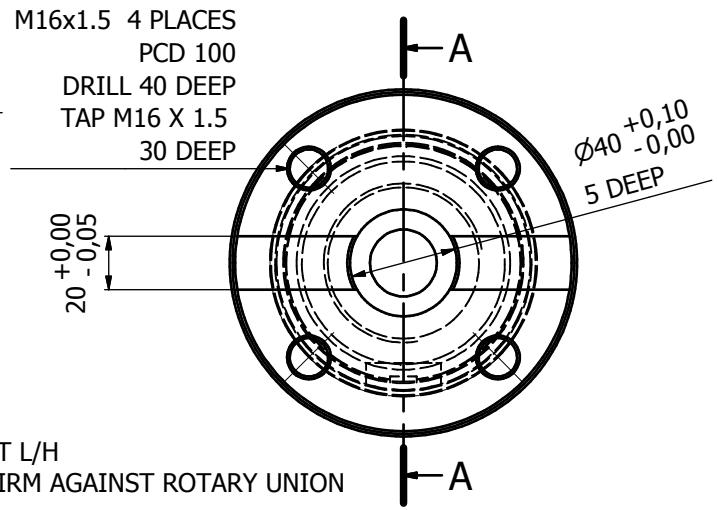

2" NPT L/H
CONFIRM AGAINST ROTARY UNION

B (2 : 1)
CIRCLIP DETAIL

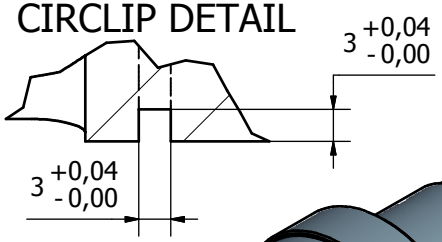

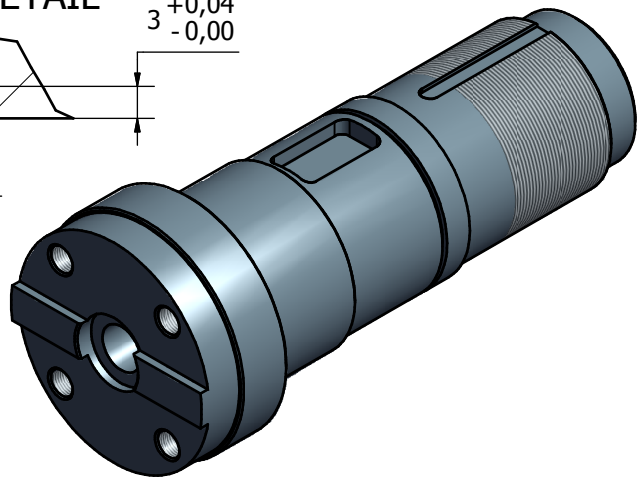

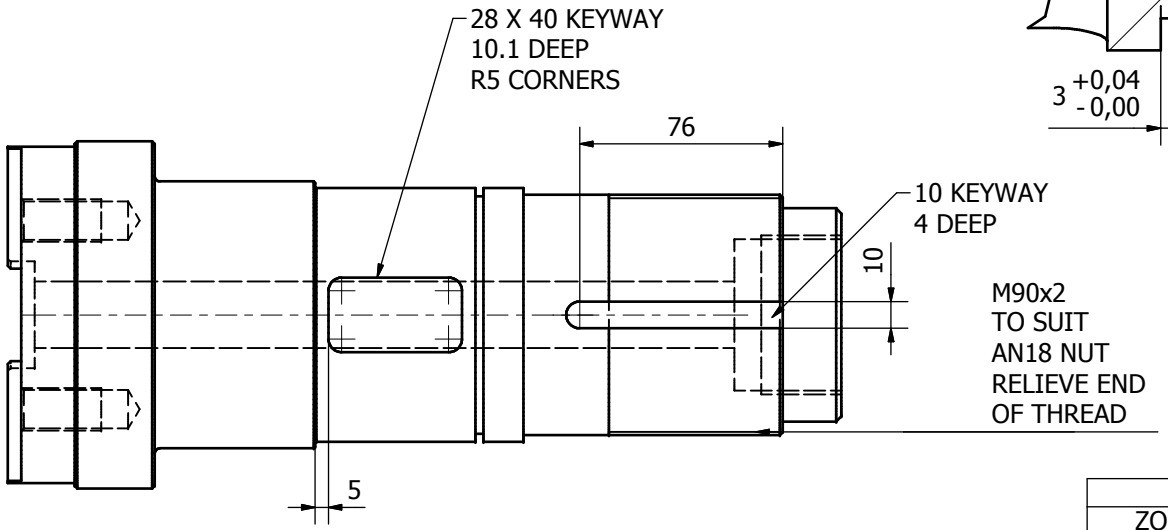

CHAMFER ALL CORNERS 1 X 45° UNLESS STATED
TOLERANCE± 0.1 UNLESS STATED

REVISION HISTORY				
ZONE	REV	DESCRIPTIO	DATE	APPROVED
	1		26/03/2010	

Designed by	Checked by	Approved by	Date		Date	
PJS					26/02/2010	

OUTPUT SHAFT		
HBG1-007	Edition 1	Sheet 1 / 1